TELEDYNE HASTINGS INSTRUMENTS
Everywhereyoulook™

High Flow Meters & Controllers

HFC-D-308A/B Digital Flow Controller

HFM-D-306A/B Digital Flow Meter

HFM-306 Analog Flow Meter

FEATURES

- Available Flow Ranges:
  0-2500 slm to 0-10,000 slm (N2)

- Accuracy in Nitrogen

HFC-D-308 ±(0.5% Rdg + 0.2% FS)
HFM-D-306 ±(0.5% Rdg + 0.2% FS)
HFM-306 ±(2% FS)

- Operating Pressure to 300 PSI
- IP-67 Version Available ("A" Series)
- NIST Traceable Calibration
- Touchscreen Display Option ("B" Series)
- RS232/RS485 (Digitals Only)
- USB ("B" Series)
- Totalized Flow (Digitals Only)

APPLICATIONS

- Alternate Energy
- Fuel Cell R&D
- Secondary Calibration Reference
- Specialty Gas Delivery
- Custody Transfer

BENEFITS

- High Accuracy
- Fast Metering Response
- Superior Linearity
- Rapid Controller Settling Time
- Digital Extended Range

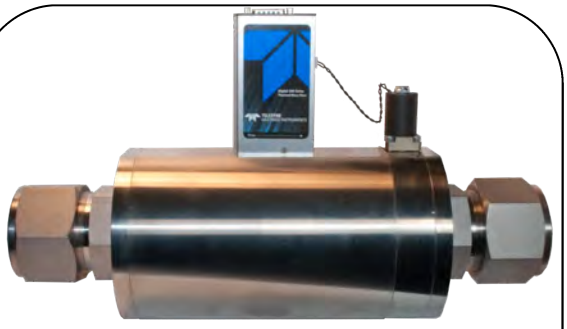

HFC-D-308A Mass Flow Controller

Optional Touchscreen Display

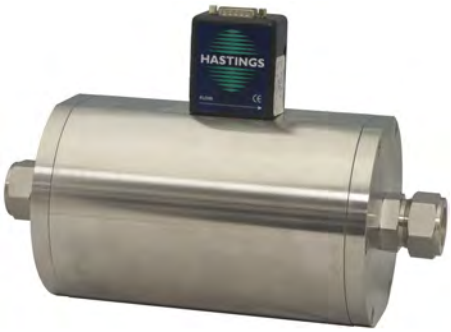

HFM - 306 Analog Flow Meter

TELEDYNE HASTINGS INSTRUMENTS
Everywhereyoulook™

Description

Teledyne Hastings Instruments products represent over 70 years of experience in the design and manufacture of gas flow instrumentation. The high flow meters and controllers featured in this document are based on the 300 Series line of flow sensors.

The 300 Series transducer is a patented thermal based flow sensor. This sensor is designed to provide exceptional linear response to changing flow rates. In addition, the electronics associated with the sensor are precisely tuned to give fast response time.

The flow transducer is combined with a laminar flow element to configure the flow meter for the customer. In many flow meters, the major source of error are the non-linearities that occur in the laminar flow element due to entrance and exit effects. However, the 300 Series laminar flow element is designed such that the flow sensing region is far less susceptible to these effects.

There are three models of the high flow 300 Series meters: HFM-306, HFM-D-306A, and the HFM-306B. The HFM-306 version is accurate to better than ±2.0% of full scale. Instruments are normally calibrated with the appropriate standard calibration gas (air), then a correction factor is used. The digital versions, HFM-D-306A and HFM-D-306B, feature a microprocessor-based circuitry which linearizes the flow response and provides the user with excellent accuracy (see chart). The B version is offered with optional color touchscreen display. The B Series also features a USB port which is standard on all meters and controllers. Both the A & B Series are compatible with Teledyne's data logging software.

The HFC-D-308A and HFC-D-308B are digital mass flow controllers based on the aforementioned digital flow technology. The digital capability enables the unit to provide fast valve response and flow control which can be optimized for applications up to 10,000 SLM of air flow.

Teledyne Hastings is recognized throughout the world as a leader in high flow instrumentation. Our infrastructure (see photo), metrology capabilities, and employees provide our customers with outstanding service. Our application engineers can help you review your system requirements and work with you to provide a solution.

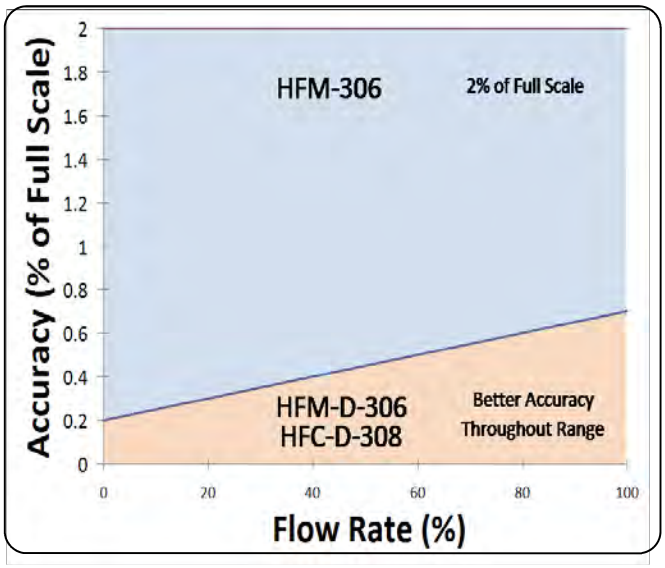

High Flow Specialists

Comparison

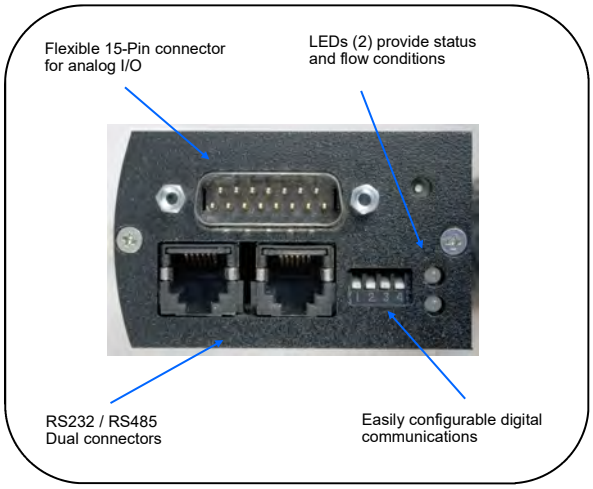

HFM-D-306A (meter)
HFC-D-308A (controller)

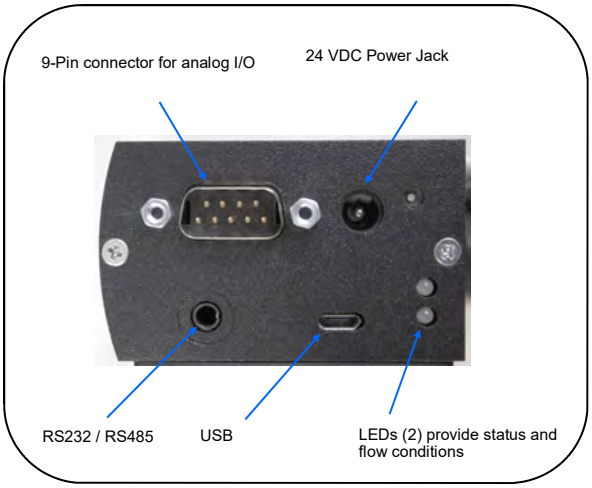

HFM-D-306B (meter)
HFC-D-308B (controller)

	A Series	B Series
D-Connector	15-Pin	9-Pin
RS232/485 Connector	Dual RJ	Video Bayonet
Status/Flow LEDs	✓	✓
Color Display/Control Option	–	✓
USB	–	✓
Compatible with Data Logging Software	✓	✓
Power Jack	–	✓
IP-67 Option	✓	–
RoHS CE	✓	✓

Specifications & Standards

	HFC-D-308A/B Controller	HFM-D-306A/B Meter	HFM-306 Meter
Performance			
Full Scale Flow Ranges (N_2)	2,500 to 10,000 SLM	2,500 to 10,000 SLM	2,500 to 10,000 SLM
Microprocessor-based Enhanced Accuracy and Digital Features	YES	YES	NO
Accuracy	± (0.5% Rdg + 0.2% FS)	± (0.5% Rdg + 0.2% FS)	± 2% FS
Repeatability	± 0.15% of FS	± 0.15% of FS	± 0.15% of FS
Operating Temperature	-20° - 70°C	-20° - 70°C	-20° - 70°C
Warm up time	30 min optimum accuracy 2 min for ± 5% of full scale	30 min optimum accuracy 2 min for ± 5% of full scale	30 min optimum accuracy 2 min for ± 5% of full scale
Temperature Coefficient of Zero	Auto-zero when Valve is Closed	Maximum ±0.2%(FS)/°C (-20—70°C)	Maximum ±0.2%(FS)/°C (-20—70°C)
Temperature Coefficient of Span	Maximum ±0.1%(Rdg)/°C (-20—70°C)	Maximum ±0.1%(Rdg)/°C (-20—70°C)	Maximum ±0.08%(Rdg)/°C (-20—70°C)
Operating Pressure -Maximum	300 psig	300 psig	300 psig
Electrical			
Voltage	11-36 VDC (±12, ±15 acceptable) 15 VDC min. for 0-20 & 4-20 mA	11-36 VDC (±12, ±15 acceptable)	± 15 VDC @ ± 55 mA (3.1W)
Power "A" Series	6.7 W	3.1 W	
Power "B" Series	8.2 W	4.6 W	
Physical			
Weight (approx.)	37 lb (16.8 kg)	29 lb (13.1 kg)	30 lb (13.6 kg)
Wetted Materials	316 SS, 302 SS, Ni 200, Viton® (Optional Buna-N®), Kalrez, PTFE	316 SS, 302 SS, Ni 200, Viton® (Optional Buna-N®), PTFE	316 SS, 302 SS, Ni 200, Viton® (Optional Buna-N®), PTFE

Standards

- European Pressure Equipment Directive (PED) 97/23/EC
- EN61010-1 Safety of Electrical Equipment for Measurement,
  Control and Laboratory Use
- EN 61326:1997/A2:2000 Radiated Emissions
  (Note: for Mounted Electronics ONLY)
- EN 61326:1997/A2:2000 Conducted Emissions
- EN 61000-4-2:1995/A2:2000 Electrostatic Discharge
- EN 61000-4-3:1995/A2:2000 Radiated RF Immunity
- EN 61000-4-4:1995/A2:2000 Electrical Fast Transient/Burst
- EN 61000-4-6:1996/A2:2000 Conducted RF
- EN 61000-4-8:1993/A2:2000 Magnetic Field

Teledyne Hastings Instruments reserves the right to change or modify the design of its equipment without any obligation to provide notification of change or intent to change.

Outline Drawing HFM-D-306 A&B

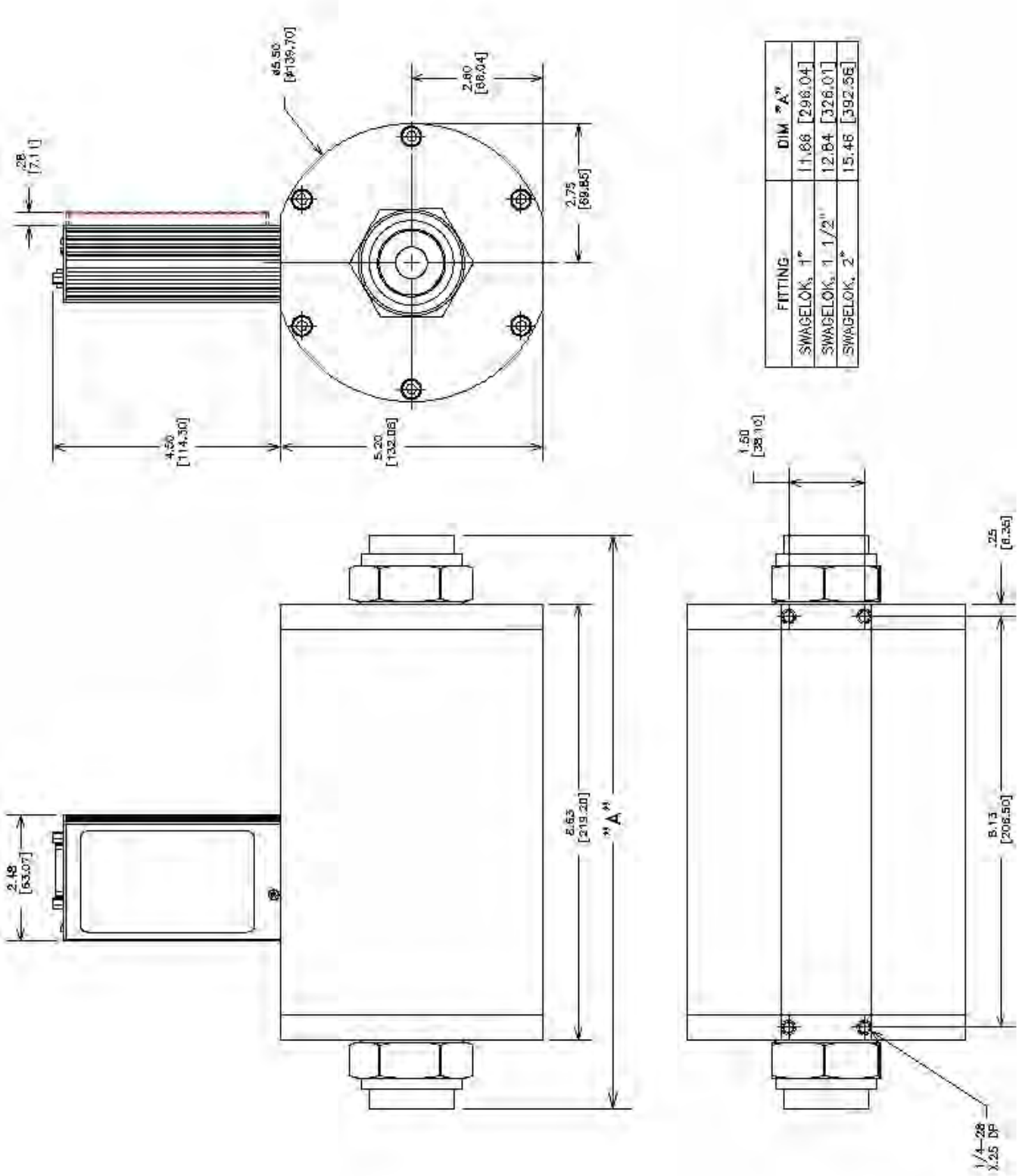

FITTING	DIM "A"
SWAGELOK, 1"	11.66 [296.04]
SWAGELOK, 1 1/2"	12.84 [326.01]
SWAGELOK, 2"	15.46 [392.56]

Outline Drawing HFC-D-308 A&B

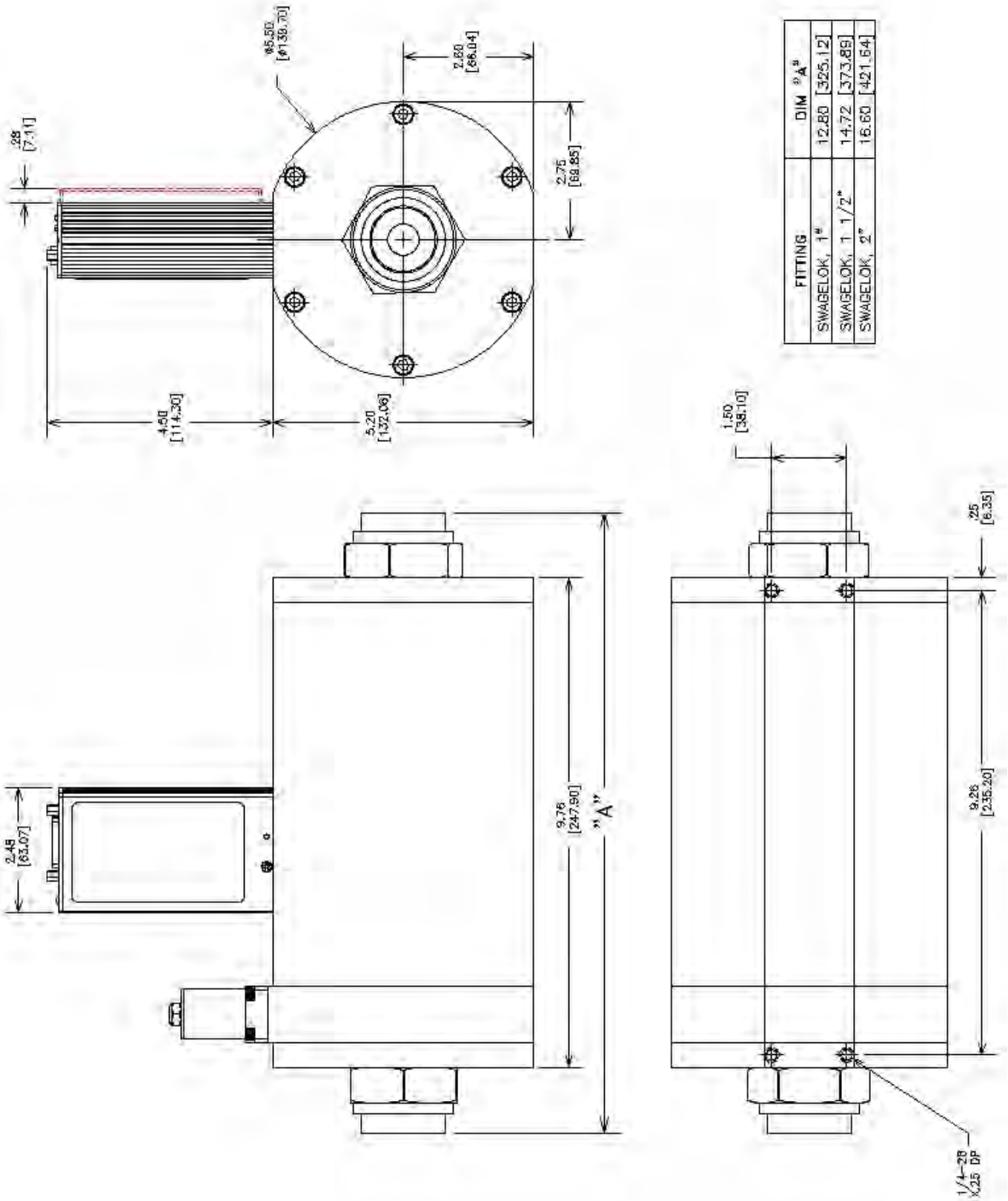

FITTING	DIM "A"
SWAGELOK, 1"	12.80 [325.12]
SWAGELOK, 1 1/2"	14.72 [373.89]
SWAGELOK, 2"	16.60 [421.64]

Outline Drawing HFM-D-306A (with IP-67)

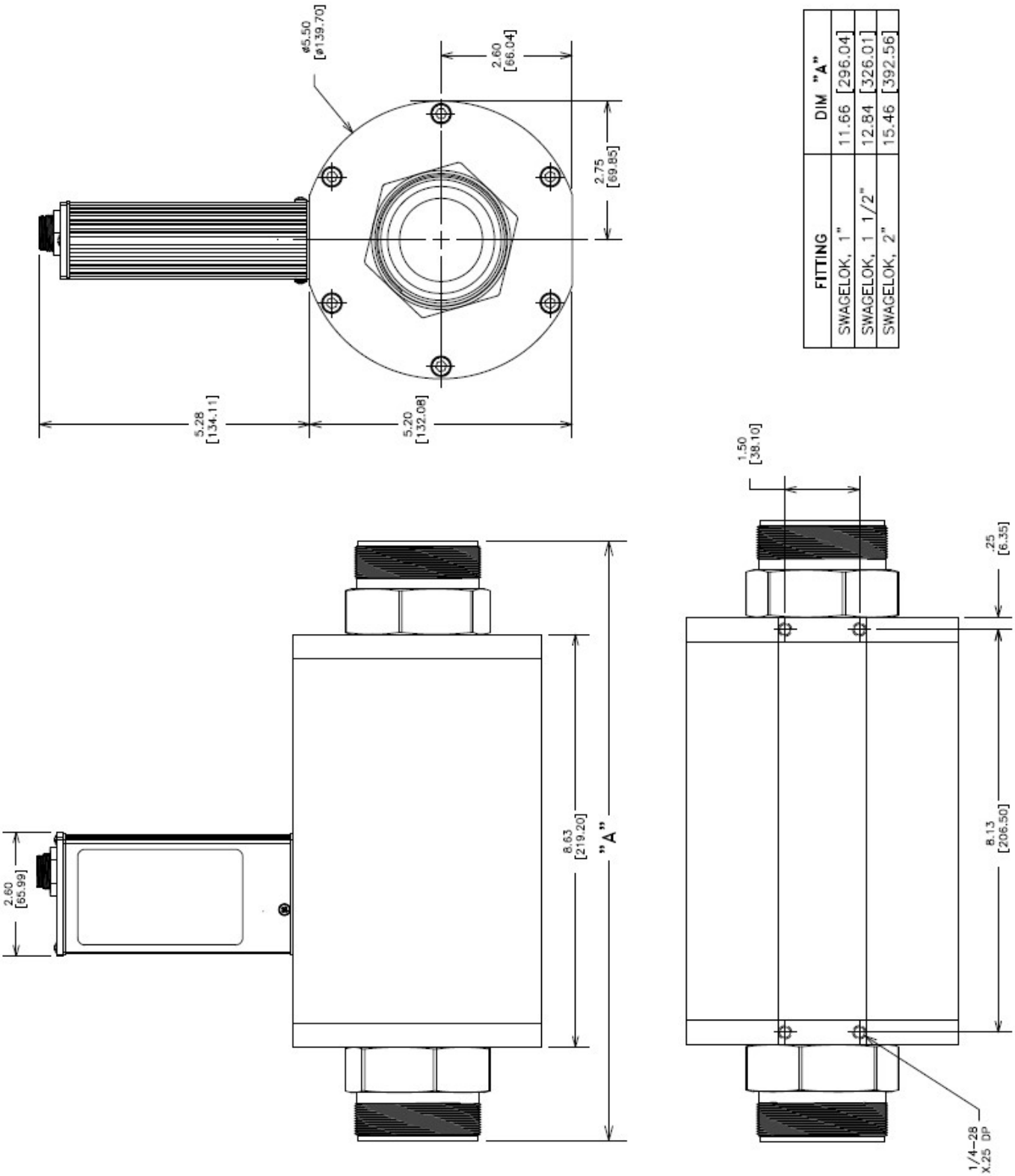

FITTING	DIM "A"
SWAGELOK, 1"	11.66 [296.04]
SWAGELOK, 1 1/2"	12.84 [326.01]
SWAGELOK, 2"	15.46 [392.56]

Outline Drawing HFC-D-308A (with IP-67)

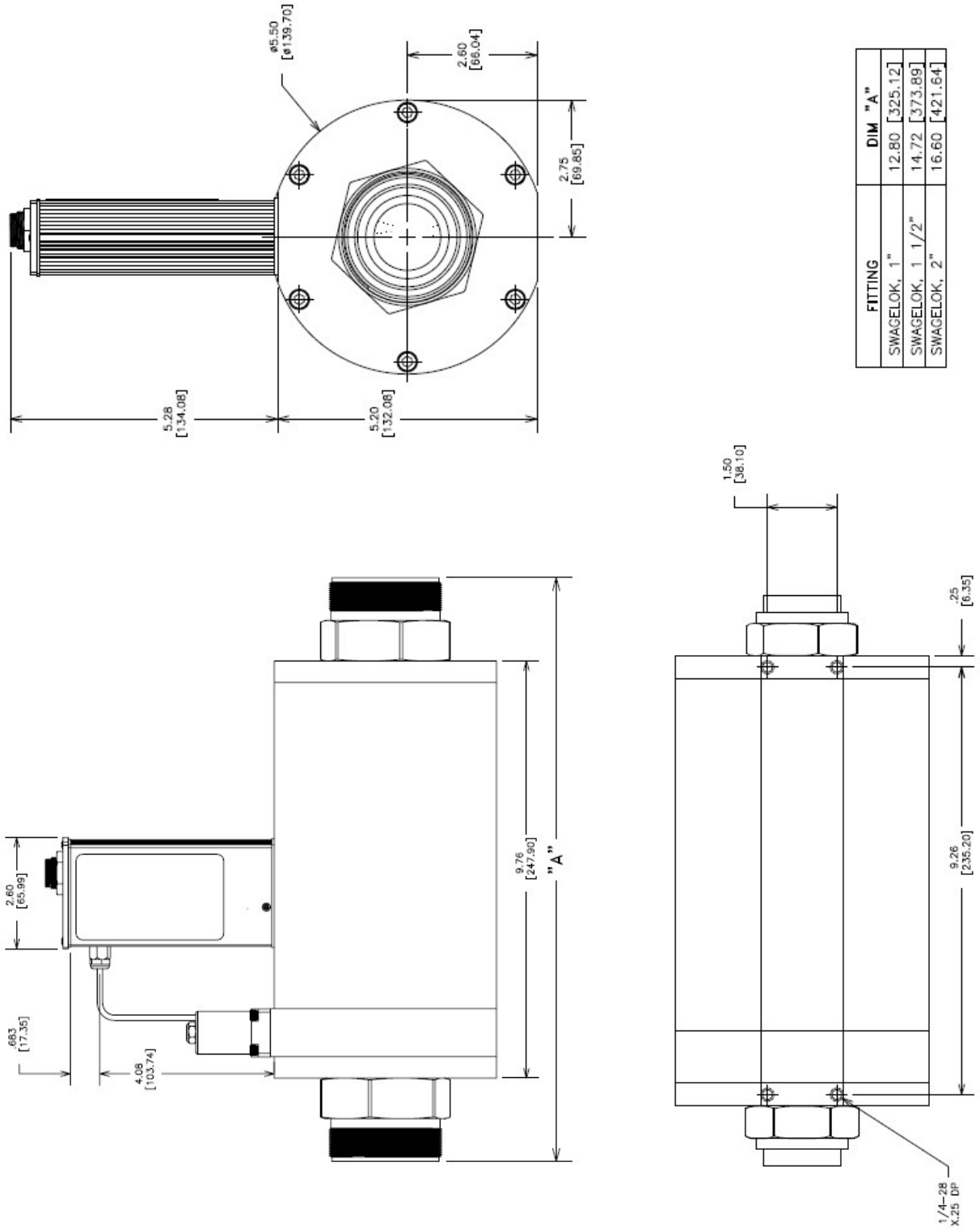

FITTING	DIM "A"
SWAGELOK, 1"	12.80 [325.12]
SWAGELOK, 1 1/2"	14.72 [373.89]
SWAGELOK, 2"	16.60 [421.64]

Outline Drawing HFM-306

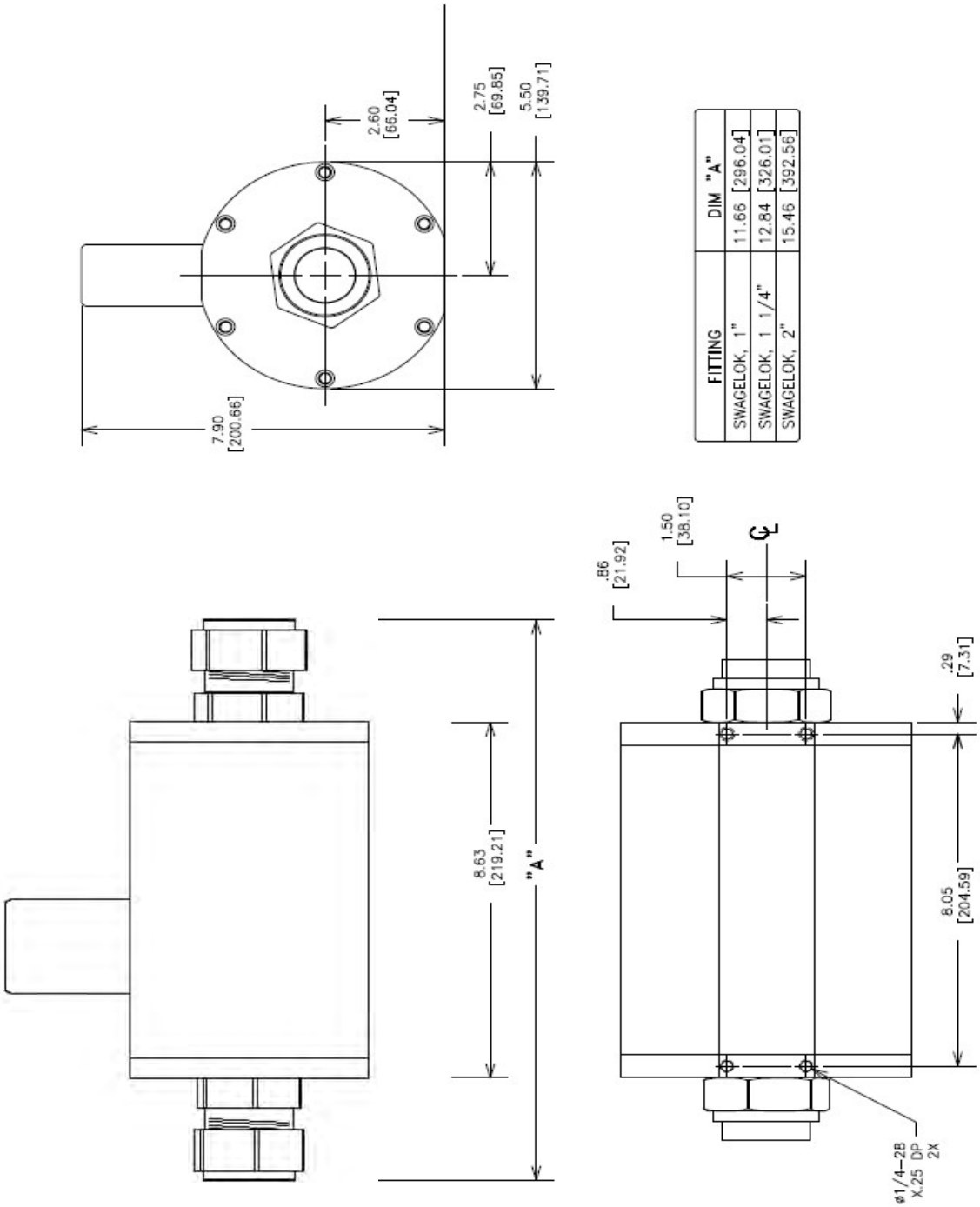

FITTING	DIM "A"
SWAGELOK, 1"	11.66 [296.04]
SWAGELOK, 1 1/4"	12.84 [326.01]
SWAGELOK, 2"	15.46 [392.56]

Selection Chart HFM-D-306A & HFC-D-308A

Model Number	Circuit Board	Output	Fittings	Seals	Working Pressure	Calibration Type	Digital
HFM-D-306A HFC-D-308A							

Circuit Board	
01	Pinout H (Std)
02	IP-67 Enclosure

Output	
01	0-5 Volt (Std)
02	0-10 Volt
03	4-20 mA
04	0-20 mA

Fittings	
01	1" Compression
02	1 1/2" Compression
03	2" Compression (Std)

Seals			
01	Viton (Std)	02	Kalrez (Meter Only)
04	Buna-N	03	Neoprene (Meter Only)

Working Pressure	
01	300 psig (Std)

Calibration Type	
01	1 NIST Traceable Calibration Report (Std)
02	2 NIST Traceable Calibration Reports
03	3 NIST Traceable Calibration Reports
04	4 NIST Traceable Calibration Reports
05	5 NIST Traceable Calibration Reports
06	6 NIST Traceable Calibration Reports
07	7 NIST Traceable Calibration Reports
08	8 NIST Traceable Calibration Reports

Digital	
01	RS232 (Std)
02	RS485

Selection Chart HFM-D-306B & HFC-D-308B

Model Number	Output	Fittings	Seals	Working Pressure	Calibration Records	Digital	Calibration Type	Display
HFM-D-306B / HFC-D-308B								

Output	
01	0-5 Volt (Std)
02	0-10 Volt
03	4-20 mA
04	0-20 mA

Fittings	
01	1” Compression
02	1 1/2” Compression
03	2” Compression (Std)

Seals			
01	Viton (Std)	02	Kalrez (Meter only)
04	Buna-N	03	Neoprene (Meter only)

Working Pressure	
01	300 psig (Std)

Calibration Records	
01	1 NIST Traceable Calibration Report (Std)
02	2 NIST Traceable Calibration Reports
03	3 NIST Traceable Calibration Reports
04	4 NIST Traceable Calibration Reports
05	5 NIST Traceable Calibration Reports
06	6 NIST Traceable Calibration Reports
07	7 NIST Traceable Calibration Reports
08	8 NIST Traceable Calibration Reports

Digital	
01	RS232 (Std)
02	RS485

Calibration Type	
01	NIST 5 Point (Std)
02	NIST 10 Point
03	NIST 20 Point

Display	
01	Touchscreen Display
02	No Display (Std)

Selection Chart HFM-306

Model Number	Pinout	Output	Fittings	Seals	Pressure	Cal
HFM-306						

Pinout	
01	Pinout H (Std)

Output	
01	0-5 Volt (Std)
02	4-20 mA

Fittings	
01	1" Compression
02	1 1/2" Compression
03	2" Compression (Std)

Seals	
01	Viton (Std)
02	Kalrez
03	Neoprene
04	Buna-N

Pressure	
01	300 psig (Std)

Calibration	
01	NIST 5 Point (Standard)
02	NIST 10 Point
03	NIST 20 Point
04	Curve w/ Polynomial Equation

Range Information for all Instruments

Each calibration will require the following information:

Range _____

Flow Units _____

Gas _____

For the HFC Instruments also

Upstream Pressure _____
(maximum & minimum)

Downstream Pressure _____
(maximum & minimum)

Does the downstream pressure change with flowrate? Y/N _____

For volumetric units the standard temperature and pressure of the unit is also required
0°C & 760 Torr will be used when other values are not specified

Power Supplies & Accessories

THCD-101 Single Channel Power Supply Meter

THCD-101	Includes brackets, connectors, and backshells

24 VDC Switching Power Supply

12-01-169	For use with "B' Series or THCD-101 (Please specify AC Input Clip)

Connects Hastings Power Supply (15-pin) to 300 "A" Series (15-pin)

AF-8-AM	8' Cable (~2.4m)	Other lengths available

Connects Hastings Power Supply (15-pin) to 300 "B" Series (9-pin)

CB-AF-8-24VM	8' Cable (~2.4m)	Other lengths available

"A" Series—IP-67 Cables

CB-12PCF-XXX-LDS (Bare Leads) **CB-12PCF-XXX-AM** (Hastings Power Supply)	Custom length cables

"B" Series—Serial Communication Cable

CB-RS232-TRRS	RS232 Cable (9-pin "D" Female to Male TRRS) 6' Cable (~1.8m)

"A" Series—Serial Communication Cable

CB-RS232-RJ12	RS232 Cable (9-pin "D" Female to RJ12) 14' (~4.3m)

(757) 723-6531
www.teledyne-hi.com
hastings_instruments@teledyne.com
804 Newcombe Ave.
Hampton, VA 23661

ISO 9001 CERTIFIED